technical specifications CRA30W

general

- Modular, scalable screen system for large to very large cinema rooms
- RBN pro-ribbon HF section with exceptional intelligibility, throw and high SPL output
- Adjustable precise projection for flat SPL room coverage
- 1:1 non-compressed linear response, with up to 90% less distortion
- Shallow system design (34,8 cm / 13,7”) for space economic mounting
- SIS™ pre-wired for very high system damping and further reduced distortion

description

The Cinemarray™ CRA30 is a 3-way sound system, designed for Digital Cinema applications where maximum quality cinema sound reproduction with perfect coverage is needed, in large premium cinema theatres.

Featuring three patented RBN401 pro-ribbon drivers, the CRA30 combines a remarkable clarity and intelligibility, with a “non-compressed” linear response at any SPL. With up to 90% less distortion and a very high 2400 W peak power handling, the HF section allows maximum screen compensation without any audible stress on the driver.
The patented horizontal dispersion extends the stereo-imaging to a larger number of seats in the auditorium.

By implementing line-source technology throughout the entire system, a flat SPL coverage from front to rear is realized, with the “proximity” effect dramatically improving the cinema experience for the audience further away from the screen. The precise projection also minimizes unwanted acoustical reflections.

The CRA30W driver arrangement consists of a triple RBN401 pro-ribbon HF driver array, three vented 6.5” mid-range drivers and two vented 15” woofers with 4” voice-coil design for LF reproduction.

The shallow enclosure design of only 34,8 cm / 13,7-in. provides for flexible mounting, claiming only a minimum of space for even a complete array!

The Cinemarray™ system is powered by an ALC Sentinel amplifier loudspeaker controller, offering system dedicated processing, optimisation and protection in factory presets for maximum sound quality and utmost operation reliability..

The Signal Integrity Sensing™ pre-wiring ensures complete cable/connector compensation between the CRA30W and ALC, significantly increasing response accuracy, regardless of cable length and system impedance, with tight and accurate mid and bass response as result.

The CRA30 comes in two versions: Both fitted with the same speaker configuration, the CRA30N (“narrow”) has a smaller vertical projection pattern for the seats further away, whereas the CRA30W (“wide”) features a wider vertical coverage pattern for the seats closer to the screen.

technical specifications CRA30W

dimensional drawing

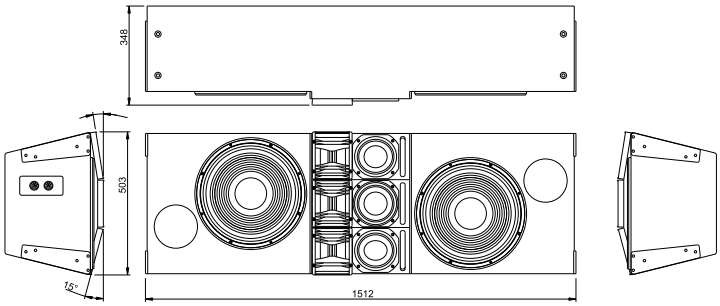

technical specifications

Frequency response	45 Hz - 20 kHz (+/- 3 dB)
	35 Hz - (+/-10 dB)
Sensitivity nominal	104 dB (200 Hz - 10 kHz)
Nominal impedance	LF 4 ohms, MF 5.3 ohms, HF 5.3 ohms,
	MF/HF 5.3 ohms (bi-amp)
Recommended drive	Sentinel10, max. 1 pce per channel (4 ohms)
Nominal SPL peak	137 dB (Sentinel3 200 Hz – 10 kHz) (bi-amp)
	141 dB (Sentinel10 200 Hz – 10 kHz) (bi-amp)
	139 dB (Sentinel3 200 Hz – 10 kHz) (tri-amp)
	143 dB (Sentinel10 200 Hz – 10 kHz) (tri-amp)
Dispersion H x V (array)	90° x depending on array length
Dispersion H x V (single)	90° x 39° (@10 kHz)

physical specifications

System	3-way full range	
Filtering	LF active, MF/HF passive or LF,	
	MF, HF active	
Drivers LF	2x AW15.4-8	
Drivers MF	3x AMD65ND-16 6.5”, vented	
Drivers HF	3x RBN401 4” pro-ribbon driver	
Connectors	2x Speakon NL8 input/link	
Physical dimensions	mm	inches
Height	504	19,8
Width	1512	59,5
Depth	368	14,5
Weight (approx.)	kg	lbs
	70,5	155,4
	65,6	144,6
Warranty	6 years limited	

A: Alcons Audio
De Corantijn 10
1689 AP ZWAAG
The Netherlands

E: info@alconsaudio.com
W: www.alconsaudio.com
T: +31 (0)229 28 30 90

071122 • Due to Alcons Audio’s continuous R&D, all specifications are subject to change without prior notice.