technical specifications CR3

general

- RBN pro-ribbon HF section with exceptional intelligibility and high SPL output
- 1:1 non-compressed sound reproduction, with up to 90% less distortion
- SIS™ pre-wired for very high damping and further reduced distortion (with ALC)
- shallow system design (35 cm / 13,7”) for space economic mounting
- bi-amp filtering for economical powering or tri-amp filtering for maximum output
- Digital Cinema ready, with non-compressed reproduction and extended dynamic range

description

The CR3 is a 3-way cinema screen sound system, designed to meet all requirements of current and future (Digital) Cinema sound formats.

Featuring the patented Alcons pro-ribbon driver technology, the CR3 combines an exceptional clarity and intelligibility from low to high output SPL’s with an unusually high dynamic range.

The CR3 offers the most realistic sound reproduction possible, for applications where high output with maximum quality cinema sound reproduction is required. It is recommended for theatres up to 350 seats (indicative).

The driver arrangement consists of a double

RBN401 pro-ribbon HF driver array, two 6.5” mid-range drivers and two vented 15” woofers for LF reproduction. The CR3 HF section has a 1600W peak power input, enabling a 1:16 dynamic range with up to 90% less distortion from 1 kHz to beyond 20 kHz.

The absence of a “compression threshold”, caters for the same tonal balance at all SPL’s, while the patented “Real-90” horizontal dispersion of the RBN401 guarantees a very stable sound field throughout the operating bandwidth, widening the stereo experience for far left and right seated audience. For optimized projection, while minimizing operational system depth, the MF/HFwaveguide features a 10° pre-tilt.

The multiple driver arrangement caters for a controlled sound projection while enabling a very shallow system design: The depth of only 35cm/13,7” provides for flexible mounting, claiming only a minimum of space behind the screen.

The CR3 is available with bi-amp filtering for economical powering or tri-amp filtering for maximum system output.

The CR3 is powered and controlled by the ALC amplified loudspeaker controller; Through the integrated CR3 drive-processing, the ALC offers response optimisation and dedicated protection.

Through the SIS™ (Signal Integrity Sensing) circuit, the cable-length and connector resistance between the CR3 and ALC is completely compensated (damping factor >10.000), for further increased accuracy and controlled cone-travel, resulting in a tighter mid and bass response.

technical specifications CR3

dimensional drawing

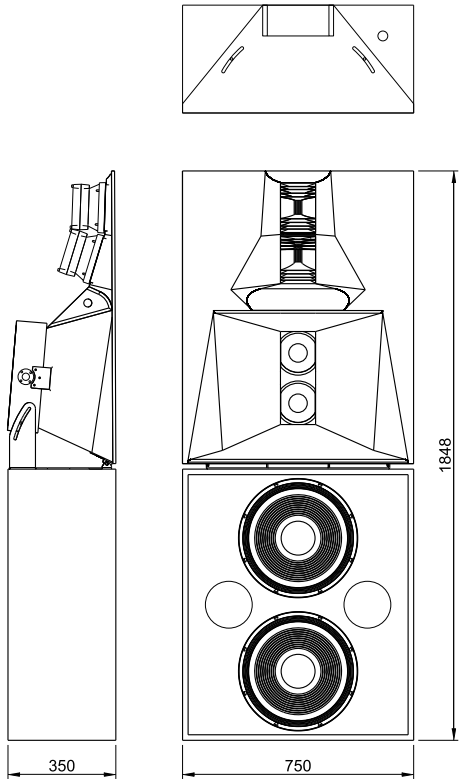

technical specifications

Frequency response	43 Hz - 20 kHz	(+/- 3 dB)
	32 Hz -	(+/-10 dB)
Sensitivity nominal	105 dB (200 Hz – 10 kHz) (tri-amp)	
Nominal impedance	LF 4 ohms, MF/HF 8 ohms (bi-amp)	
	LF 4 ohms, MF 32 ohms,	
	HF 8 ohms (tri-amp)	
Recommended drive	Sentinel3 min., max. 1 pce.	
	per 2 channels (bi-amp)	
Nominal SPL peak	132 dB (bi-amp), 137 dB (tri-amp)	
	(Sentinel3 200 Hz – 10 kHz)	
	134 dB (bi-amp), 139 dB (tri-amp)	
	(Sentinel10 200 Hz – 10 kHz)	
Dispersion H x V	90° x 40° (nom./w. screen diffraction)	

physical specifications

System	3-way full range	
Filtering	LF active, MF/HF passive or LF,	
	MF, HF active	
Drivers LF	2x AW15.4-8, 15” vented	
Drivers MF	2x AMD65ND-16 6.5”, vented	
Drivers HF	2x RBN401 4” pro-ribbon driver	
Connectors	2x Speakon NL4 input/link	
Physical dimensions	mm	inches
Height	1848	72,8
Width	750	29,5
Depth	350	13,8
Weight (approx.)	kg	lb
	53	117
	26	57,3
Warranty	6 years limited	

A: Alcons Audio
De Corantijn 10
1689 AP ZWAAG
The Netherlands

E: info@alconsaudio.com
W: www.alconsaudio.com
T: +31 (0)229 28 30 90

041122 • Due to Alcons Audio’s continuous R&D, all specifications are subject to change without prior notice.

evolutionary audio solutions™